WT65F4

USB uC with 8KB ISP Flash Memory
12-bit A/D Converter

Data Sheet

REV. 1.00

Nov.18, 2001

The information in this document is subject to change without notice.

©Weltrend Semiconductor, Inc. All Rights Reserved.

E-Tech Electronics Ltd.

Hong Kong Headquarters:
Unit D, 3/F., Unison Industrial Centre,
27-31 Au Pui Wan Street, Fo Tan, Shatin, N.T. H.K.
Tel.: (852) 2607 0218 Fax (852) 2607 0155
E-Mail: mktg@e-tech.com.hk
Web Site: http://www.e-tech.com.hk

ShenZhen Branch:
Unit 1403, 14/F, Pacific Commercial Building,
Chia Pin Road, ShenZhen, China
Tel: (0755) 2136 018 Fax: (0755) 2136 008
E-Mail: sales_sz@e-tech.com.hk

1. General Description

The WT65F4 is single chip Micro-controller with low speed Universal Serial Bus (USB) and A/D functions. It includes an 8-bit 8051 CPU core, 256 bytes SRAM, 8K Bytes Flash memories, 4K boot/ICE ROM, and 32 Programmable I/O. Build-in USB and A/D function suitable for UPS, touch pad, joystick & digital board application.

2. Features

- 8051 CPU core
- Internal Oscillator circuit for crystal from 0.5MHz, 1MHz, 2MHz, 4MHz, 6MHz, 8MHz to 12MHz
- 256 bytes SRAM
- 4K byte Internal ROM for ISP and software ICE function use
- 8K bytes Flash Memory
- 4 flash programming modes: parallel, 2-wire ISP, ICE, and normal mode (USB download and RS232 download).
- 32 programmable I/O pins
- 8-pin key wake up function
- Full duplex serial bus for synchronous or asynchronous
- Embedded USB function with three endpoints (one control Enpoint0, two Interrupt IN endpoint)
- Watchdog timer (2^{22} clock cycles time)
- Two 16-bit programmable timers
- Two-channel 8-bit programmable PWM
- ADPCM push-pull DA
- Seven-channel 12-bits rail-to-rail A/D converters
- Low VDD reset at 3.5V ~ 3.7V
- Power on reset
- Support power down/idle power management
- Integrated 3.3V power regulator for USB use
- CMOS technology for low power consumption
- Total 4 ports with 25mA Source Current and 8 ports with 25mA Sink Current
- DIP-40, LQFP-48, SDIP-28 or SOP-28 package

Hong Kong Headquarters:
Unit D, 3/F., Unison Industrial Centre,
27-31 Au Pui Wan Street, Fo Tan, Shatin, N.T. H.K.
Tel.: (852) 2607 0218 Fax (852) 2607 0155
E-Mail: mktg@e-tech.com.hk
Web Site: http://www.e-tech.com.hk

ShenZhen Branch:
Unit 1403, 14/F, Pacific Commercial Building,
Chia Pin Road, ShenZhen, China
Tel: (0755) 2136 018 Fax: (0755) 2136 008
E-Mail: sales_sz@e-tech.com.hk

3. Package information

Table 1. WT65F4 Package Types

Package Type	Part Number
LQFP 48	WT65F4 -Q48
DIP 28	WT65F4 -N28
DIP 40	WT65F4 -N40
SOP 28	WT65F4 -S28

4. Pin Assignment and Description

Table 2. Pin Descriptions

Pin No.			Pin Name	I/O	Description
48	40	28			
46	1		P1.0	I/O	General purpose I/O with pull-up resister
47	2		P1.1	I/O	General purpose I/O with pull-up resister
48	3		P1.2	I/O	General purpose I/O with pull-up resister
1	4		P1.3	I/O	General purpose I/O with pull-up resister
2	5		P1.4	I/O	General purpose I/O with pull-up resister
3	6		P1.5	I/O	General purpose I/O with pull-up resister
4	7		P1.6	I/O	General purpose I/O with pull-up resister
5	8		P1.7	I/O	General purpose I/O with pull-up resister
6	9	25	RESET	I	Active High external Reset input
7	10	26	P30/RXD	I/O	General purpose I/O with pull-up resister/serial bus receive port
8	11	27	P31/TXD	I/O	General purpose I/O with pull-up resister/serial bus transmit port
9	12	28	P32/INT0	I/O	General purpose I/O with pull-up resister/external interrupt 0
10	13	1	P33/INT1	I/O	General purpose I/O with pull-up resister/external interrupt 1
11	14	2	P34/T0	I/O	General purpose I/O with pull-up resister/Timer 0 external input
12	15	3	P35/T1	I/O	General purpose I/O with pull-up resister/Timer 1 external input
13	16	4	P36/PWM0	I/O	General purpose I/O with pull-up resister/PWM0 output
14	17	5	P37/PWM1	I/O	General purpose I/O with pull-up resister/PWM1 output
15			VSS	I	Power Ground for DAC
16			DAOUT0	O	DAC output 0
17			DAOUT1	O	DAC output 1
18			VDD	I	Power Source for DAC
19	18	6	XTAL2	O	Oscillator output
20	19	7	XTAL1	I	Oscillator input
21	20	8	VSS	P	Power ground

22	21	9	P20/AD0	I/O	General Purpose I/O with pull-up resistor/ADC channel 0 (25mA Source/Sink current)
23	22	10	P21/AD1	I/O	General Purpose I/O with pull-up resistor/ADC channel 1 (25mA Source/Sink current)
24	23	11	P22/AD2	I/O	General Purpose I/O with pull-up resistor/ADC channel 2 (25mA Sink current)
25	24	12	P23/AD3	I/O	General Purpose I/O with pull-up resistor/ADC channel 3 (25mA Sink current)
26	25	13	P24/AD4	I/O	General Purpose I/O with pull-up resistor/ADC channel 4 (25mA Source/Sink current)
27	26	14	P25/AD5	I/O	General Purpose I/O with pull-up resistor/ADC channel 5 (25mA Source/Sink current)
28	27	15	P26/AD6	I/O	General Purpose I/O with pull-up resistor/ADC channel 6 (25mA Sink current)
29	28	16	P27/Advref	I/O	General Purpose I/O with pull-up resistor/ADC reference voltage (25mA Sink current)
30	29	17	DM	I/O	USB D- signal
31	30	18	DP	I/O	USB D+ signal
32	31	19	V33	P	3.3V power regulation output
33	32		P07/KI7	I/O	General Purpose IO with pull-up resistor/key interrupt.
34	33		P06/KI6	I/O	General Purpose IO with pull-up resistor/key interrupt.
35	34		P05/KI5	I/O	General Purpose IO with pull-up resistor/key interrupt.
36	35		P04/KI4	I/O	General Purpose IO with pull-up resistor/key interrupt.
37			ICE_N	I	ICE mode input with internal pull-up. Active low.
38			ICESTOP_N	I	Run interrupt in ICE mode with pull-up resistor. Active low
39			P41	I/O	General Purpose I/O with pull-up resistor.
40			P40	I/O	General Purpose I/O with pull-up resistor.
41	36	20	P03/KI3	I/O	General Purpose IO with pull-up resistor/key interrupt.
42	37	21	P02/KI2	I/O	General Purpose IO with pull-up resistor/key interrupt.
43	38	22	P01/KI1	I/O	General Purpose IO with pull-up resistor/key interrupt.
44	39	23	P00/KI0	I/O	General Purpose IO with pull-up resistor/key interrupt.
45	40	24	VDD	I	+5V power supply.

4.1 Pin Configuration

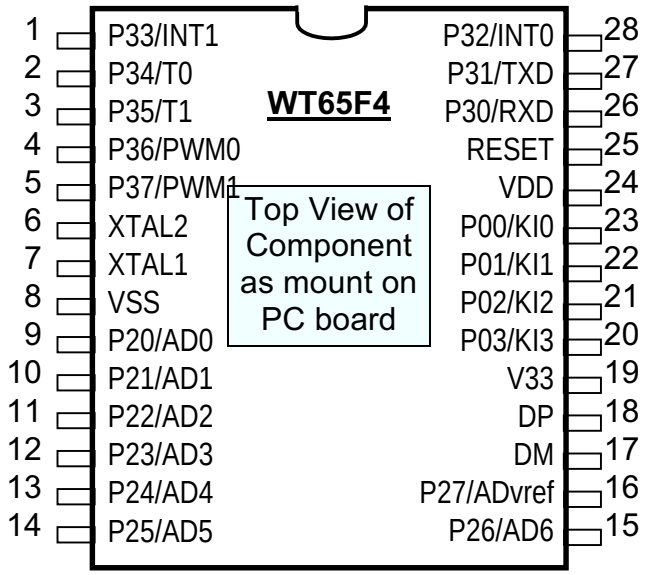

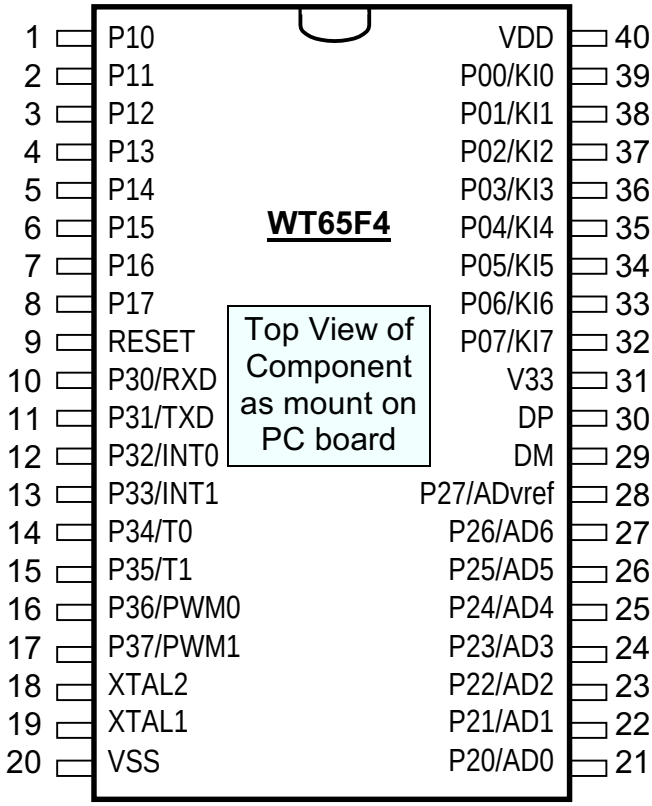

Figure 1. WT65F4 40-pin DIP & 28-pin SOP/DIP package

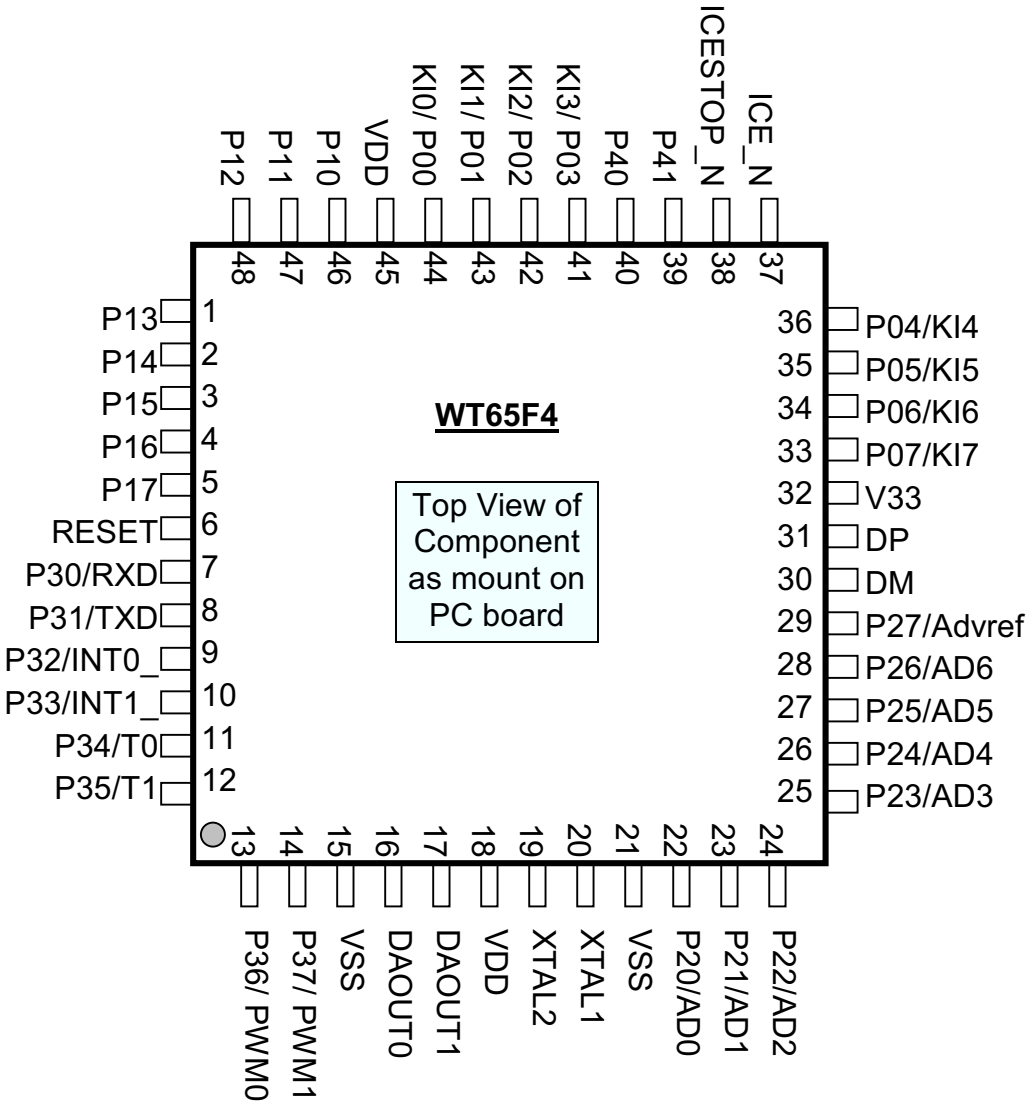

Figure 2. WT65F4 48-pin QFP package