GISD1802 NPN EPITAXIAL PLANAR SILICON TRANSISTOR

Description

The GISD1802 applies to voltage regulators, relay drivers, lamp drivers, and electrical equipment.

Features

*Adoption of FBET, MBIT processes
*Large current capacity and wide ASO
*Low collector-to-emitter saturation voltage
*Fast switching speed

Package Dimensions

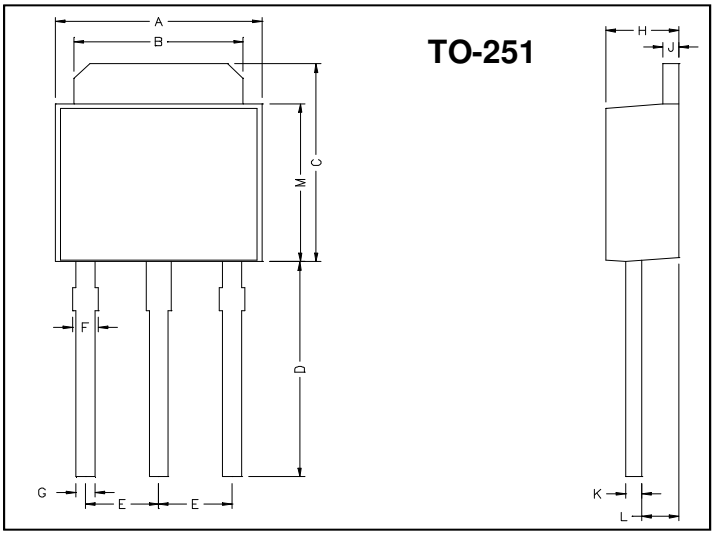

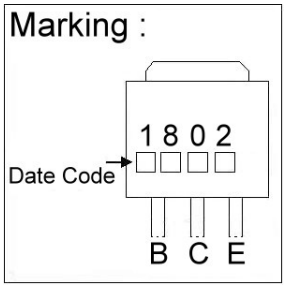

REF.	Millimeter		REF.	Millimeter	
	Min.	Max.		Min.	Max.
A	6.40	6.80	G	0.50	0.70
B	5.20	5.50	H	2.20	2.40
C	6.80	7.20	J	0.45	0.55
D	7.20	7.80	K	0.45	0.60
E	2.30 REF.		L	0.90	1.50
F	0.60	0.90	M	5.40	5.80

Absolute Maximum Ratings (Ta = 25℃, unless otherwise specified)

Parameter	Symbol	Ratings	Unit
Junction Temperature	Tj	+150	℃
Storage Temperature	Tstg	-55 ~ +150	℃
Collector to Base Voltage	V_{CBO}	60	V
Collector to Emitter Voltage	V_{CEO}	50	V
Emitter to Base Voltage	V_{EBO}	6	V
Collector Current(DC)	I_C	3	A
Collector Current(Pulse)	I_{CP}	6	A
Collector Dissipation	P_D	1	W
	Tc=25℃	20	W

Electrical Characteristics (Ta = 25℃ unless otherwise specified)

Symbol	Min.	Typ.	Max.	Unit	Test Conditions
$V_{(BR)CBO}$	60	-	-	V	I_C=10uA, I_E=0
$V_{(BR)CEO}$	50	-	-	V	I_C=1mA, R_{BE}=∞
$V_{(BR)EBO}$	6	-	-	V	I_E=10uA, I_C=0
I_{CBO}	-	-	1	μA	V_{CB}=40V, I_E=0
I_{EBO}	-	-	1	μA	V_{EB}=4V, I_C=0
V_{CE}(sat)	-	0.19	0.5	V	I_C=2A, I_B=0.1A
V_{BE}(sat)	-	0.94	1.2	V	I_C=2A, I_B=0.1A
h_{FE1}	100	-	560		V_{CE}=2V, I_C=0.1A
h_{FE2}	35	-	-		V_{CE}=2V, I_C=3A
fT	-	150	-	MHZ	V_{CE}=10V,I_C=50mA
ton	-	70	-	ns	See test circuit
tstg	-	650	-	ns	See test circuit
tf	-	35	-	ns	See test circuit
Cob	-	25	-	pF	V_{CB}=10V, f=1MHz

Classification Of hFE1

Rank	R	S	T	U
Range	100 ~ 200	140 ~ 280	200 ~ 400	280 ~ 560

Switching Time Test Circuit

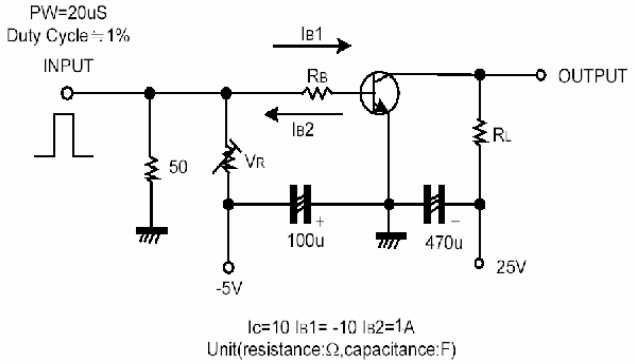

Characteristics Curve

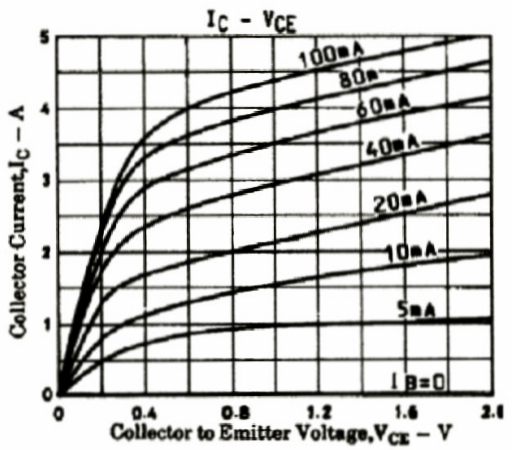

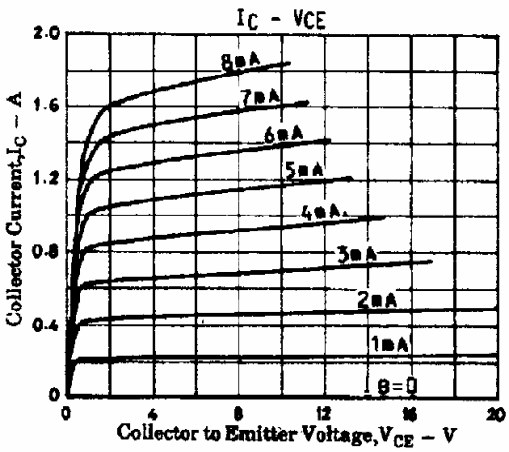

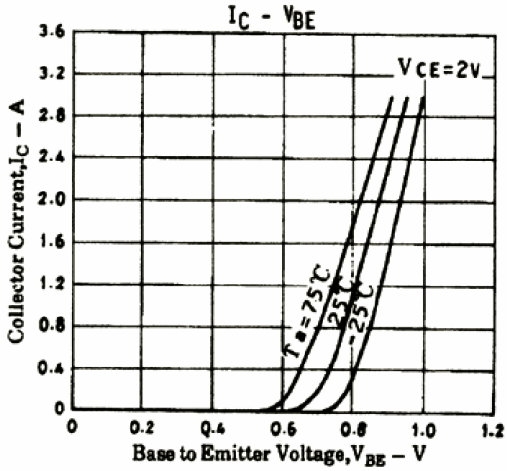

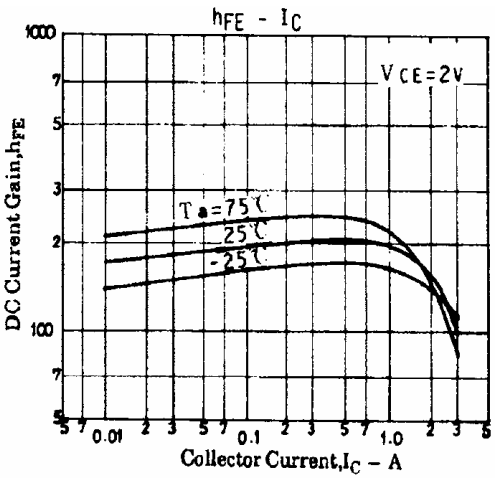

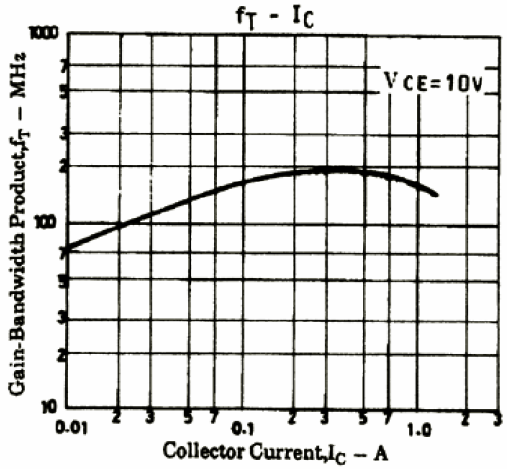

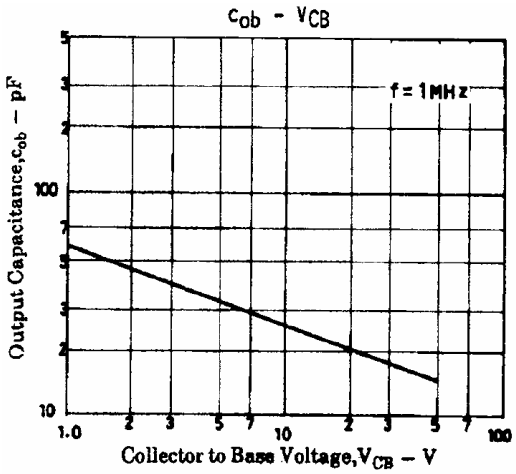

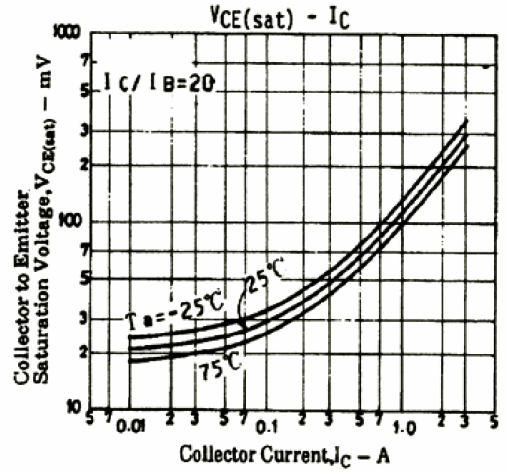

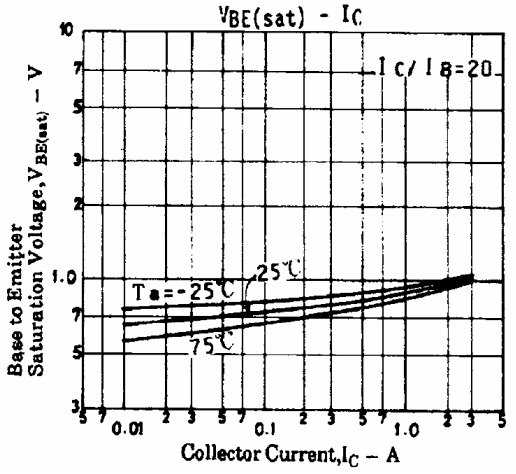

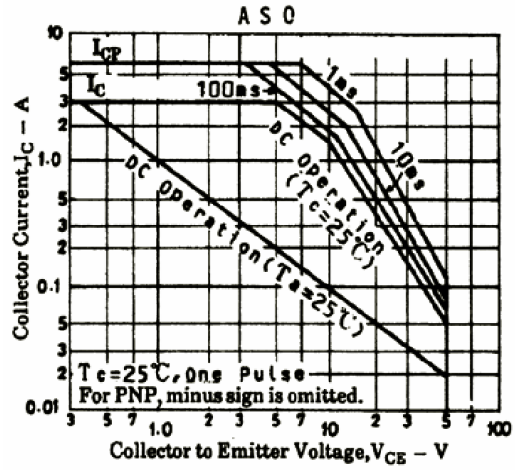

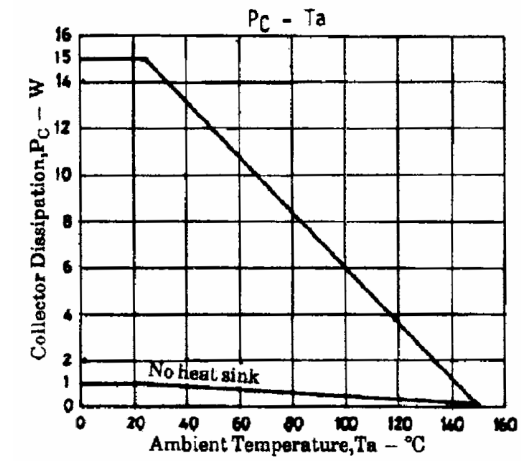

Important Notice:
- All rights are reserved. Reproduction in whole or in part is prohibited without the prior written approval of GTM.
- GTM reserves the right to make changes to its products without notice.
- GTM semiconductor products are not warranted to be suitable for use in life-support Applications, or systems.
- GTM assumes no liability for any consequence of customer product design, infringement of patents, or application assistance.

Head Office And Factory:
- **Taiwan**: No. 17-1 Tatung Rd. Fu Kou Hsin-Chu Industrial Park, Hsin-Chu, Taiwan, R. O. C.
  TEL : 886-3-597-7061 FAX : 886-3-597-9220, 597-0785
- **China**: (201203) No.255, Jang-Jiang Tsai-Lueng RD. , Pu-Dung-Hsin District, Shang-Hai City, China
  TEL : 86-21-5895-7671 ~ 4 FAX : 86-21-38950165